THE MIKADO MESSENGER

2007 PRINCE OF WALES

Building Britain's Most Powerful Steam Locomotive

Forging a trailing coupling rod at Stephenson (Engineering) Ltd - *Robert Stephenson/A1SLT*

Welcome to edition No. 73 of The Mikado Messenger, our monthly eNewsletter which aims to provide a regular progress update on the construction of new Gresley class No. 2007 *Prince of Wales*.

As you will read elsewhere in this issue of The Mikado Messenger, significant progress is being made on all current areas of activity including both of our new boilers where assembly of the first boiler is underway and the heavy motion.

Due to the ongoing COVID-19 situation, our staff are still working from home or at Darlington Locomotive Works (DLW) where they are taking all the necessary precautions. The Works remain closed to volunteers, non-essential staff and visitors. We hope you understand that these circumstances are beyond our control and the restrictions are very necessary at this challenging time. We are reviewing all our activities on a frequent basis to protect everyone involved with the Trust and to secure our long-term future. Please keep an eye on our website and Facebook pages for updates, call 01325 460163 or email enquiries@p2steam.com if you have any questions.

FUNDRAISING UPDATE

A P2 for the price of a pint of beer a week: around 930 supporters have signed up as Covenantors for No. 2007 *Prince of Wales,* from as little at £2.50 per week, and are now kindly donating over £205,000 annually including Gift Aid. If you haven't yet signed up as a Covenantor we would encourage you to get on-board. You can find more information here.

The Boiler Club has reached 206 members, leaving just 94 spaces available - passing the two-thirds milestone. As substantial progress is now being made on our boilers, we would urge those who haven't yet contributed towards the purchase of No. 2007 *Prince of Wales'* boiler to join us. This is the single most expensive component on the locomotive and the boiler for No. 2007 is due to be delivered to Darlington Locomotive Works (DLW) in 2021. More information about The Boiler Club can be found here.

The Tender Club is still filling up slowly, with 88 places taken - over one third of the initial target. In order to keep on schedule to complete No. 2007 within three years, we need to complete the manufacture of the tender frames. Our target for The Tender Club is 250 members, contributing £1,500, so if you would like to contribute towards the tender more information can be found here.

We launched **The Turbogen Club** in July and the fundraising campaign has already 'generated' 23 members - over half of the initial target. Our target for The Turbogen Club is 40 members, contributing £1,000, so if you would like to contribute towards the turbo-generator more information can be found here.

Our newest fundraising campaign, **The P2 Support Coach Appeal**, was launched in August to acquire, overhaul and convert BR Mark 1 BSK E34547 into the support coach for No. 2007. Our target is to raise £100,000 from 100 supporters each donating £1,000. We have already recruited 31 supporters - almost a third of the initial target - and if you would like to contribute towards this appeal more information can be found here.

The Motion Club has now reached our initial 175 members target. As you will see below, the machining of the second pair of coupling rods is underway. You can find more information about The Motion Club here - help us to fund the manufacture of No. 2007's motion!

The Pony (Truck) Club, has attracted substantial interest and has galloped past its initial target. You can find more information about The Pony (Truck) Club here - help us to fund the manufacture and certification of No. 2007's pony truck.

You can sponsor components of No. 2007 *Prince of Wales* from as little as £30, ranging up to £15,000! The **Dedicated Donations** scheme has already raised over £400,000. If you would like to sponsor a component, please email dedicated.donations@p2steam.com, detailing the amount you would like to donate and/or if you had a specific part of the engine in mind, we will then send you some component recommendations to suit your donation.

To-date, over £2.5m has been spent and more than £3.0m raised of the required £5m to complete No. 2007 *Prince of Wales* within the next three years.

If there are any surplus funds left when our fundraising clubs have fulfilled their nominated purpose, we will use the money to buy other components for the Gresley class P2 that the charity would not otherwise have.

ENGINE FRAMES UPDATE

Ian Matthews checking bolts in the cab floor plate - *CAG Photography/A1SLT*

Summary: engine's frames erected; all major frame stays, brackets, horn blocks, axle boxes & buffers cast and fitted using around 1,000 driven bolts.

Progress update: with the tender tank undercoating complete it has been possible to remove the wheelsets from under the engine frames. This has permitted fitting of the remaining driven bolts and cold turned rivets in the outside motion brackets and the spring hangers.

Next steps: the profile for the shelf under the cab has been made and delivery is expected imminently - this will need the expert services of Ian Matthews to hot bend a flange on each end, so that it can be bolted to the outer Cartazzi frames. The shelf will facilitate fitting the electrical trunking in this area which is complex as it includes the terminal boxes for the engine-tender umbilical connections.

Fundraising: The Founders Club was established in September 2013 to give the project a racing start and get it to the point of erecting the engine's frames with a target of raising £100,000 plus Gift Aid from 100 supporters each donating £1,000. The Founders Club closed in July 2014 having attracted 360 members and raised around £450,000.

PONY TRUCK UPDATE

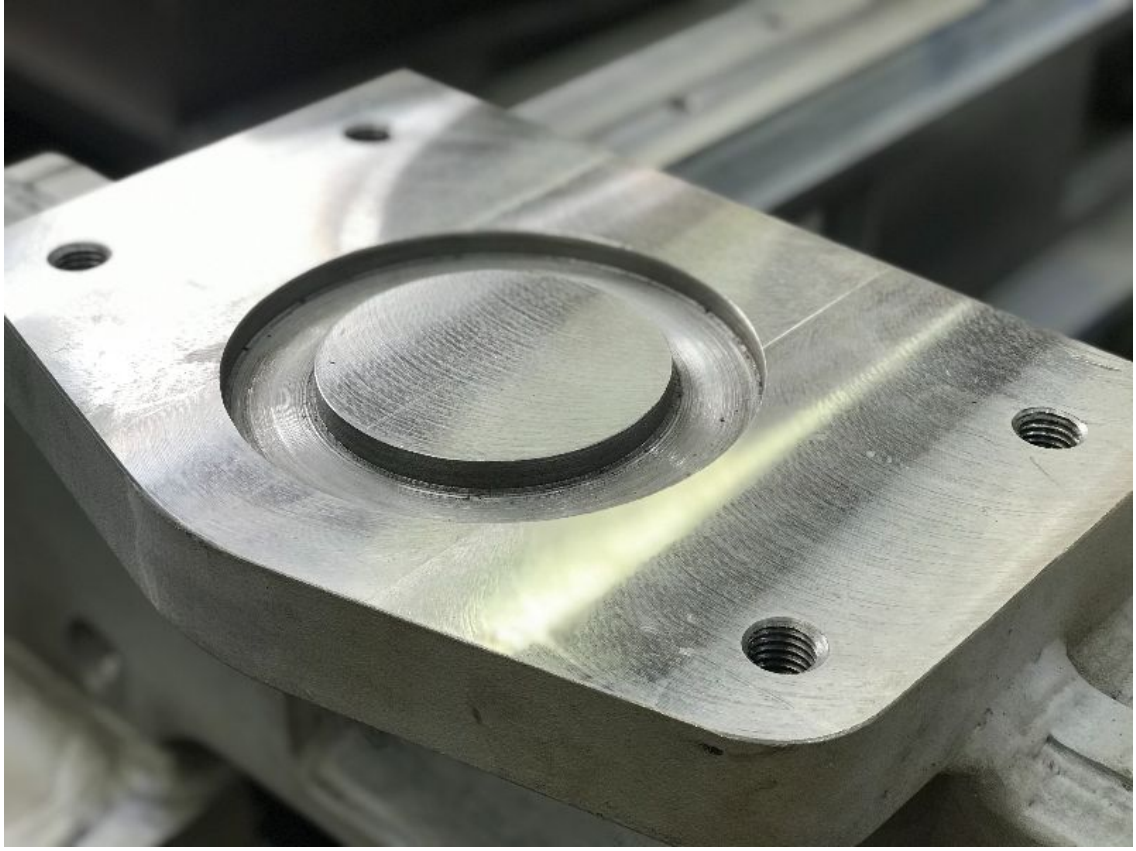

A machined pony truck frame vertical bearer pad, at NVES - *A1SLT*

Summary: redesign of the pony truck, using side control springs, has been completed; order for pony truck frame fabrication placed with North View Engineering Solutions (NVES) in Darlington; pony truck wheelset and cannonbox delivered.

Progress update: NVES has made further progress with machining the three main components of the bogie comprising the bogie frame, steering arm and crosshead; the latest progress at NVES includes welding of side spring bearer plates, spring supports and manganese steel liners onto the pony truck frame fabrication - these will be machined to the determined size and dimensions already established by precise measurements taken on the pony truck cannon box; both pony truck frame vertical bearer pads have been machined and are awaiting bearer cups to be ordered and fitted.

Next steps: completion of machining of principle components; welding of manganese steel liners to horn blocks and finish machining of liners; manufacture of spring gear details; final assembly of the cannonbox onto the wheelset; machining of the spring planks and machining of bearer cup and spherical side bearers.

Fundraising: in April 2020, we launched a £20,000 appeal – The Pony (Truck) Club – to fund the construction of the leading pony truck for No. 2007 *Prince of Wales*. We set a minimum target of 20 generous supporters willing to donate £1,000 plus Gift Aid (in up to four payments of £250) but this mini-club has galloped away and already passed its initial target. We have therefore decided to extend the club by a few members to cover the considerable certification costs associated with the modified pony truck design. Please consider joining The Pony (Truck) Club in advance of the frame's delivery to DLW. For further information click here.

CYLINDERS UPDATE

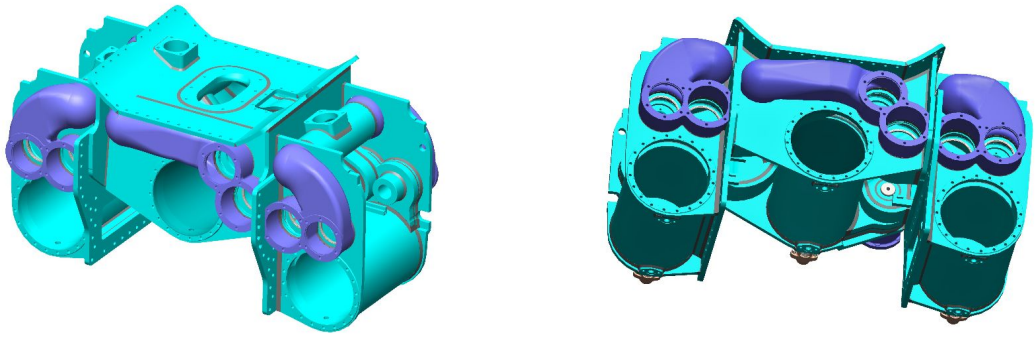

Cylinder and cam box section view in 3D CAD - *Alan Parkin/A1SLT*

Summary: design studies into cylinder block manufacture and selection of valve gear complete; 3D CAD design of the cylinder block and valve gear substantially complete; further progress has been made in applying the weld details to the cylinder block inside exhaust passages with particular attention being paid to the order of fabrication to ensure that all welds can be completed properly.

Progress update: further work on the 1:8 scale 3D model of cylinder block; work is continuing in 3D CAD to create component configurations to pass on to the 2D drawings - this is where a component can be shown in different states, for example with pre-welding machining and then with post-welding machining; progress also continuing in producing the 2D manufacturing drawings, this month concentrating on the middle rear cylinder and steam passages; we are in discussions with a firm of Computational Fluid Dynamics (CFD) specialists to analyse the cylinder block design to check that it is optimal for steam flow.

Next steps: completion of a set of 3D models and a sample of 2D manufacturing drawings to be made available to companies wishing to express an interest in manufacturing the cylinder block - this will lead up to production of a full set of manufacturing drawings to enable a shortlist of companies to quote for the complete cylinder block.

Fundraising: The Cylinder Club was founded in October 2017 to fund the redesign and manufacture of the cylinder block with a target of raising £100,000 plus Gift Aid from 100 supporters each donating £1,000. The Cylinder Club closed in March 2018 having achieved its target.

BOILER UPDATE

Assembly of the first boiler at DBM - *A1SLT*

Summary: boiler design study completed, revised design approved by TüV Sud notified body and sent to UK authorities for information and comment and no adverse responses have been received; forged foundation ring corners manufactured and machined; regulator castings delivered; superheater header cast and machined; boiler cladding manufactured, trial fitted to frames and now in storage; boiler order placed with DB Meiningen (DBM) for delivery in 2021; foundation ring forgings and regulator castings despatched to DBM; minor re-design of the banjo dome to suit the P2 cladding completed by DBM; major progress on manufacture of the boiler and its components including the assembly of the barrel sections and marrying up to the inner firebox for the first boiler.

Progress update: DLW is manufacturing the regulator cross shafts and stuffing boxes which will be required to set up the regulator mechanisms inside the boilers and to conduct the hydraulic tests; at DBM, all the basic components have been manufactured so uniting of the main sub-assemblies is underway and the boiler is beginning to look like a boiler; the regulator cross shaft has been welded onto the crank (which operates a link between a cross shaft and a regulator) and subjected to Non-destructive Testing (NDT); the shafts are awaiting a special process of applying melted sifbronze onto the shaft's bearing surfaces and then they will be machined to a required dimension - once done and inspected these will be ready to be send to DBM; stuffing box castings have been proofed machined and passed a preliminary hydraulic test.

Next steps: full assembly of boiler barrels and firebox shells; fully machine two sets of stuffing boxes and apply and machine sifbronze onto the bearing surfaces of regulator cross shafts.

Fundraising: The Boiler Club was founded in October 2017 to fund the design modification and manufacture of the boiler with a target of raising £600,000, plus Gift Aid, from 300 supporters each donating £2,000 in up to 16 payments of £50. As of today, The Boiler Club has attracted 206 members who have generously donated over £410,000, excluding Gift Aid. For further information click here – we must reach our 300 members target in 2021.

WHEELSETS UPDATE

An altered lower circumference spring link - *A1SLT*

Summary: study into ride and suspension completed using Vampire® software; crank axle re-designed to comply with modern standards, approved and manufactured; all engine wheelsets complete and trial-fitted to engine; cannon boxes ready for final fitment to intermediate and trailing coupled wheelsets.

Progress update: Ian Matthews has completed the additional machining of the lower coupled cannonbox halves to enable the spring links to be fitted - the castings being slightly oversize in this area have required additional machining; Ian has also altered the shape of spring links around their lower circumference, so they are free to rotate when inserted into axle and cannon boxes - this is due to the nature of the corresponding castings.

Next steps: assembly of the intermediate and trailing cannonboxes onto their wheelsets.

Fundraising: The Mikado Club was founded in March 2016 to wheel the engine with an initial target of raising £200,000, plus Gift Aid, from 160 supporters each donating £1,000. This was extended in May 2017 (to also wheel the tender) to 200 supporters raising £250,000 plus Gift Aid. The Mikado Club closed in May 2018 having achieved its target.

MOTION UPDATE




Clockwise from top left: inside connecting rod being forged; early maching of leading coupling rod; a mirror finish polished intermediate coupling rod (at DLW); later stage machining of leading coupling rod (forging and machining of rods at Stephenson (Engineering) Ltd) - *Robert Stephenson/A1SLT*

Summary: all heavy motion ordered from Stephenson (Engineering) Ltd of Atherton; work started on machining the four coupling rods with the first pair delivered to DLW in September; updated poppet valve gear design almost complete with first components in manufacture.

Progress update: intermediate coupling rods (between second and third coupled wheelsets) are at DLW and have been fettled and polished to a mirror finish; new bronze white metal lined rod bushes are taking shape at one of our supplier; trailing coupling rods machining is nearing completion; inside connecting rod has been forged.

Next steps: completion of leading coupling rods machining; heat treatment of trailing rod forgings followed by machining; forging of inside connecting rod strap; awaiting delivery of new bronze rod bushes which will be pressed into intermediate coupling rods; altering the design of the oil lids and

commencing their machining.

Fundraising: The Motion Club was founded in May 2018 to fund forging and machining of the heavy motion, with a target of raising over £210,000 including Gift Aid, from 175 supporters each donating £1,000 in up to eight payments of £125. As of today, The Motion Club has reached the initial target of 175 members, who have generously donated over £200,000. For further information on how to become a member click here.

TENDER UPDATE

Tender frame at I D Howitt; the tender tank in green undercoat; tender hornblocks with manganese steel liners - *Nigel Facer/A1SLT*

Summary: axlebox and other tender castings produced by William Cook Cast Products; frames being assembled by I D Howitt; tank construction complete, painted in green undercoat by Ian Matthews and now stored outside under a tarpaulin to create more space inside DLW; tender wheelsets at DLW, having been have been assembled South Devon Railway Engineering and painted by Ian Matthews.

Progress update: the sprinkler pipe, water feed pipes, and main water valve have been modelled and added to the 3D CAD assembly to facilitate locating the electrical structured trunking on the frames; intermediate (axles two and three) axlebox slipper blocks and their bronze rubbing blocks have been machined; due to the long wheelbase of the Doncaster eight wheeled tender, the intermediate wheelsets have a total of 1in of side play to assist in negotiating tight curves - bronze discs sit in the machined depressions in the slipper blocks which in turn sit between the axlebox and the spring; the tender hornblocks have been sent from NVES (where the manganese steel liners were welded on) back to Ian Howitt where their machining is being completed prior to permanently bolting to the frames.

Next steps: completion of the frames; continue 3D CAD work on tender electrical and pipework layout.

Fundraising: The Tender Club was launched in April 2019 to fund the construction of the tender, with a target of raising £450,000, including Gift Aid, from 250 supporters each donating £1,500 in up to eight payments of £125. As of today, The Tender Club has so far only attracted 88 members who have generously donated over £130,000 - we still have a long way to go to fund the tender's construction. For further information on how to become a member click here.

ELECTRICALS UPDATE

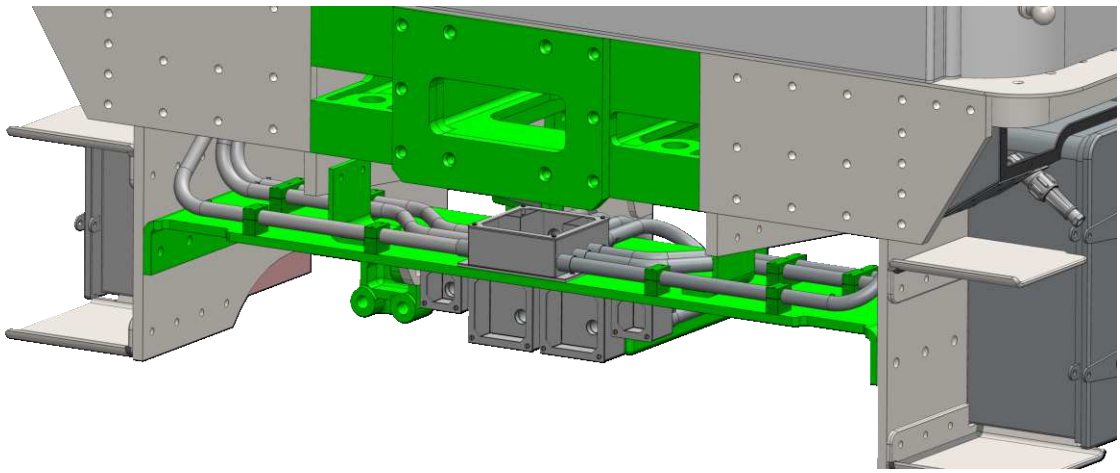

3D CAD image attached of the shelf at the rear of the engine which shows the trunking above and below it - *Alan Parkin/A1SLT*

Summary: further good progress on the design of the electrical system; construction of first batch of LED headlamp drivers complete; turbogen start-up circuit designed and bench tested; electrical system risk assessment and standards compliance checks underway.

Progress update: work continues on the electrical system with designing and prototyping of a tachometer circuit to automatically start up and bring online the two turbogens - this will be tested on *Tornado* when it is next in steam; risk assessment for the electrical system has started, with assembly of an initial Hazard Log and ranking of risks; formal process of assessing the design against applicable standards has also begun; work continues on the new head/tail/marker luminaire design with Roger Millington refining the optics to ensure the combined luminaire delivers the best performance on each lamp aspect; Alan Green has produced a new marker/tail driver design to be used on the rear tender lamps - this is backwards-compatible with the *Tornado* luminaires, so we will be able to upgrade these when required.

Next steps: the turbogen startup circuit will be tested on *Tornado* and then incorporated into the Turbogen Switch Box schematic; work on electrical risk assessment and standards compliance will continue with internal reviews of completed drafts.

Fundraising: We launched The Turbogen Club in July and the fundraising campaign has already 'generated' 23 members - over a third of our target. Our target for The Turbogen Club is 40 members, contributing £1,000, so if you would like to contribute towards the turbo-generator more information can be found here.

MISCELLANEOUS FITTINGS

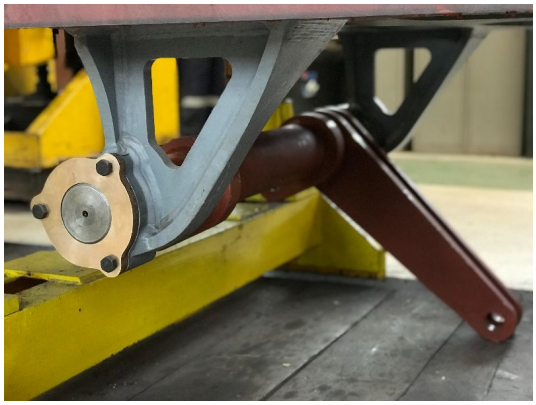

Trial fitting of brake shaft bronze bushes and brake shafts, and brake hangers - *A1SLT*

Running Gear

Summary: brake gear fully designed and mostly manufactured, drain cock linkage (based on A1 design) drawn; linkage components made.

Progress update: good progress is being made installing the cylinder drain cock linkage which has been adapted to the very reliable design on *Tornado* to replace the less reliable cable operated system used on the original P2s and the A4s; brake hangers for trailing wheelset have been trial fitted with trailing brake stay beam - this resulted in minor tweak on one of brake hanger thicknesses which resulted in a correct side play to be achieved; final fitting of crown nuts with washers and brake hanger pins, attached onto the frames, drilled to lock crown nuts in place; Edward Laxton has machined brake cross shafts bronze bushes from castings and these have been fitted onto the combined spring hanger brackets to allow the fitting of the brake cross shafts; the spare *Tornado* brake cylinder has been reassembled so that it can be tried in the frames for alignment and geometrical checks with the cross shafts coupled to the cylinders.

Next steps: wheelsets have been removed from the frame, to enable the brake cross shaft bearing bushes to be completed and the brake shafts installed; cylinder drain cock linkage to be installed between the frame; measurement of the lateral clearance between brake cross shaft bushes and shafts to determine the actual side play and to adjust the bronze bushes; anticipating receipt of the rest of the six Y shaped brake hangers - we have started the assembly and trial fit of the brake system.

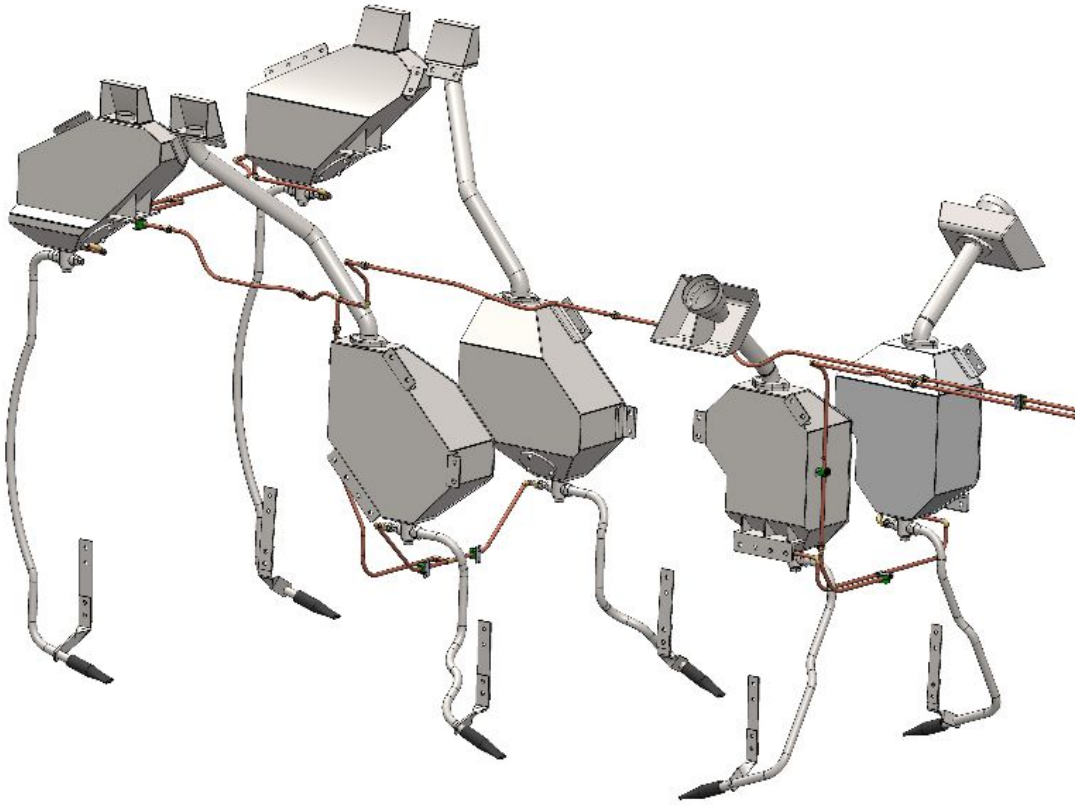

Sand boxes and pipework - *Alan Parkin/A1SLT*

Pipework

Summary: the design is well advanced and installation under way.

Progress update: Alan Parkin has continued drawing the pipework through the tender.

Next steps: continuation of design of pipework details; ordering of long lead items; quotations are being sought for the supply of over 500m (1,600ft) of copper pipe in a range of sizes and for several hundred GHD silver solder pipe fittings.

Fundraising

The Dedicated Donations scheme was founded to fund numerous components including the non-ferrous fittings and has raised over £400,000 to-date with new parts being frequently made available for sponsorship. For further information, click here.

P2 SUPPORT COACH UPDATE

BR Mark 1 BSK E35457 at Grand Central Railway - *A1SLT*

Earlier this month BSK 35457 was moved from North Norfolk Railway to Great Central Railway by Reid's Transport Services. The move went off without a hitch and we are grateful to our friends at North Norfolk Railway and Great Central Railway for their help in making this happen. As soon as lockdown restrictions permit, we shall conduct a full survey of our new acquisition to plan the work we wish to undertake to improve the vehicle for our own use. The additional features that we enjoy on *Tornado's* Support Coach make operations and living on the coach so much easier and more pleasant and we will look to add these to BSK 35457 in time. It really is an essential vehicle for both the locomotive and the support crew, carrying all the tools and consumables needed to manage the locomotive on main line tours and on visits to preserved lines.

A unique opportunity arose for A1SLT to acquire BR Mark 1 BSK E35457 for eventual use as the support coach for No. 2007 *Prince of Wales*. Brake Corridor Second (BSK) E35457 was built at Wolverton in 1963, is fitted with Commonwealth bogies and was most recently used as the support coach for BR standard class 4 No. 76084. In surprisingly excellent condition, E35457 will require minimal work other than the reinstatement of its dual-brakes and the addition of a similar electrical system to that fitted to E21249, No. 60163 *Tornado's* support coach.

Fundraising: The P2 Support Coach Appeal was founded in August to fund the acquisition and overhaul of a support coach for No. 2007 *Prince of Wales* with a target of raising £100,000 from 100 supporters, each donating £1,000 in up to eight payments of £125. As of today, The P2 Support Coach Appeal has attracted 31 members - almost one third of the intial target. For further information on how to become a member click here.

Progress on No. 2007 *Prince of Wales - A1SLT*

TRAVEL WITH *TORNADO*

No. 60163 *Tornado* at Carlisle on 12th September 2020 – *Graham Nicholas/A1SLT*

In 2021 we will be starting our operating season earlier with two trains over the Valentine's Day weekend before making our first visit to the City of Hull and running to Aberdeen from Glasgow in a variation to our regular summer itinerary. A highlight for many will be *Tornado* and *Flying Scotsman* working together in September and demand is bound to be high for those trains. We are also visiting Liverpool, the Cumbrian Coast and of course our regular summer programme of 'The Aberdonian' from Edinburgh to Aberdeen.

Diary of Railway Touring Company tours hauled by No. 60163 *Tornado* in 2020

- Saturday 12th December – 'The Edinburgh Christmas Market' - York to Edinburgh and return (RTC)
- Thursday 17th December – 'The Christmas White Rose' - Cambridge to York and return (RTC)
- Saturday 19th December – 'The Christmas White Rose' - London to York and return (RTC)

Tornado Railtours 2021 Diary

- Saturday 13th February - Valentine's Luncheon Circular Tour - from York, Thirsk and Darlington
- Saturday 13th February - Valentine's Evening Circular Tour - from York
- Saturday 13th March - 'The Ribblehead Rambler' - Hull to Carlisle and return
- Saturday 27th March – 'The Fens and Fells Flyer' - Cambridge to Carlisle and return
- Saturday 3rd April – 'The Aberdonian' - Edinburgh to Aberdeen and return
- Monday 5th April - 'The Clyde Aberdonian' - Glasgow to Aberdeen and return
- Saturday 10th April – 'The Caledonian' - Birmingham to Edinburgh and return
- Saturday 8th May – 'The Cumbrian Explorer' - Darlington to Carlisle and return
- Saturday 15th May – 'The Jorvik Express' - Liverpool to York and return
- Saturday 22nd May – 'The Pennine Explorer' - Leicester to Carlisle and return
- Thursday 22nd July - 'The Aberdonian' - Edinburgh to Aberdeen and return
- Sunday 31st July - 'The Aberdonian' - Edinburgh to Aberdeen and return
- Thursday 12th August - 'The Aberdonian' - Edinburgh to Aberdeen and return
- Thursday 19th August - 'The Aberdonian' - Edinburgh to Aberdeen and return
- Thursday 2nd September - 'The Aberdonian' - Edinburgh to Aberdeen and return

- Saturday 11th September - 'The Aberdonian' - Edinburgh to Aberdeen and return
- Thursday 16th September - *Tornado* and *Flying Scotsman* - West Midlands to Carlisle and return
- Thursday 16th September - *Flying Scotsman* and *Tornado* - Peterborough to Carlisle and return
- Saturday 18th September - *Tornado* and *Flying Scotsman* - Middlesbrough to Carlisle and return
- Saturday 18th September - *Flying Scotsman* and *Tornado* - Birmingham to Carlisle and return

Tornado Railtours trains can be booked through the links above, our website or by calling 01325 488215.

Railway Touring Company (RTC) tours can be booked through their website or by calling 01553 661500. Their tours for the early part of December have either been cancelled or postponed: for further details please contact them directly.

Facebook Twitter Website Email

Our mailing address is:
The A1 Steam Locomotive Trust, Darlington Locomotive Works, Hopetown Lane, Darlington. DL3 6RQ