THE MIKADO MESSENGER

2007 PRINCE OF WALES

Building Britain's Most Powerful Steam Locomotive

Prince of Wales' firebox tubeplates - *Christopher Wörfel, DBM/A1SLT*

Welcome to edition No. 67 of *The Mikado Messenger*, our monthly eNewsletter which aims to provide a regular progress update on the construction of new Gresley class No. 2007 *Prince of Wales*.

Thanks to our supporters' continued generosity, almost £3.75m has now been donated or pledged – this equates to **almost three quarters of the required £5m**.

The *Yorkshire Post* recently sent a small team to see the fabulous progress at Darlington Locomotive Works and their photographer Bruce Rollinson took some amazing shots, one of which can be seen in this edition of *Mikado Messenger*. You can see the article on their website here. There is a short video embedded in the article where Ian Matthews' does a great job of explaining the build and encouraging new people to support it! Thank you to Ian and the *Yorkshire Post*.

We are following Government guidelines with regards to the coronavirus, and whilst our office-based staff are now working from home, our workshop staff continue to work at Darlington Locomotive Works where they are taking all necessary precautions. However, the Works is currently closed to non-essential staff, volunteers and visitors. As a small charity we value your continued support and hope that you will be able to visit DLW to view our progress with *Prince of Wales* in the not too distant

future. We will of course be reviewing all our activities on a frequent basis to protect everyone involved with the Trust and to secure our long-term future. Please keep an eye on our website and Facebook pages for updates or call 01325 460163 or email enquiries@a1steam.co.uk if you have any questions.

FUNDRAISING

A P2 for the price of a pint of beer a week: around 930 supporters have signed up as Covenantors for No. 2007 *Prince of Wales,* from as little at £2.50 per week, and are now kindly donating over £205,000 annually including Gift Aid. We aim to reach 1,000 regular donors by the 2020 convention in September. If you haven't yet signed up as a Covenantor we would encourage you to get on-board. You can find more information here.

The Motion Club has now welcomed 164 members, with only 11 places remaining of our 175 members target. You can find more information about The Motion Club here - help us to fund the manufacture of No. 2007's motion!

The Boiler Club has hit the 191 members mark, leaving just 109 spaces available. As we have now placed our order for the boiler, we would urge those who haven't yet contributed towards the purchase of No. 2007 *Prince of Wales'* boiler to join us. This is the single most expensive component on the locomotive and is due to be delivered to Darlington Locomotive Works (DLW) in 2021. More information about The Boiler Club can be found here.

The Tender Club, is filling up with 65 places already taken. In order to keep on schedule to complete No. 2007 within three years, we need to complete the manufacture of the tender frames. Our target for The Tender Club is 250 members, contributing £1,500, so if you would love to contribute towards the tender more information can be found here.

Our brand new club, **The Pony (Truck) Club** has already attracted enormous interest and has surpassed its target. You can find more information about The Pony (Truck) Club here - help us to fund the manufacture of No. 2007's pony truck.

You can sponsor No. 2007 *Prince of Wales* components from as little as £25 ranging up to £15,000! The **Dedicated Donations** scheme has already raised over £400,000. If you would like to sponsor a component, please email dedicated.donations@p2steam.com, detailing the amount you would like to donate and/or if you had a specific part of the engine in mind, we will then send you some component recommendations to suit your donation.

To-date, almost £2.5m has been spent, almost £3.0m raised and almost £3.75m pledged of the required £5m to complete No. 2007 *Prince of Wales* within the next three years.

If there are any surplus funds left when our fundraising clubs have fulfilled their nominated purpose, we will use the money to buy other components for the Gresley class P2 that the charity would not otherwise have.

ENGINE FRAMES UPDATE

A Cartazzi spring guide trial fitted to the frame; an outside motion bracket fitted to the frame - *A1SLT*

Summary: engine's frames erected; all major frame stays, brackets, horn blocks, axle boxes & buffers cast and fitted using around 1,000 driven bolts.

Progress update: with the arrival of the tender tank, the coupled and Cartazzi wheelsets have been re-fitted in the frame to create space to prepare and paint the tender tank; the supply of the final bolts for the motion brackets has been delayed by the COVID-19 lockdown; checks on the fit of the Cartazzi axleboxes in the their hornguides have indicated excessive clearances.

Next steps: when the final bolts to attach the outside motion brackets to the frame arrive they will be fitted; two thicker manganese steel liner plates for the leading Cartazzi horn blocks will be procured to address the axlebox clearance problem.

Fundraising: The Founders Club was established in September 2013 to give the project a racing start and get it to the point of erecting the engine's frames with a target of raising £100,000 plus Gift Aid from 100 supporters each donating £1,000. The Founders Club closed in July 2014 having attracted 360 members and raised around £450,000.

PONY TRUCK UPDATE

Pony truck cast iron crosshead bush and pre-machined components - *A1SLT*

Summary: redesign of the pony truck, using side control springs, has been completed; order for pony truck frame fabrication has been placed with North View Engineering Solutions (NVES) in Darlington; the pony truck wheelset and cannonbox have been delivered.

Progress update: given that the pony truck is a safety critical component, and to assist in achieving certification approval for the modified design, discussions have been held with a rail consultancy to provide independent assessment of the structure of the pony truck to confirm that it meets current standards. This will also extend the work previously done by Resonate using Vampire® software to model the ride performance of the locomotive. As the new pony truck structure has been created to comply with Railway Group Standards, it is not anticipated that the structural study will result in further alterations. In the meantime, work is in hand to finish machine the adjustment rings for the pony truck cannon box and our apprentice Ed Laxton has started machining the pony truck spring bolts

Next steps: completion of fabrication of pony truck components, stress relieving, grit blasting and priming followed by machining; manufacture at DLW of pony truck spring bolts, final machining of cannonbox adjustment rings and assembly of cannonbox onto axle bearings; a modification is to be made to the upper half cannonbox to incorporate a screw plug to facilitate purging air from the cannonbox when it is filled with grease. This modification was first applied on *Tornado* during the 2015 overhaul and has proved to be effective. Several requests of quotation have been issued for profiles for spring gear details.

Fundraising: last month we launched a £20,000 appeal – The Pony (Truck) Club – to fund the construction of the leading pony truck for No. 2007 *Prince of Wales*. We set a minimum target of 20 generous supporters willing to donate £1,000 plus Gift Aid (in up to four payments of £250) but this club has galloped away and more than 20 supporters have already signed up. We have therefore decided to extend the club by a few members to cover the considerable certification costs associated with the modified pony truck design. Please consider joining The Pony (Truck) Club in advance of the frame's delivery to DLW. For further information click here.

CYLINDERS UPDATE

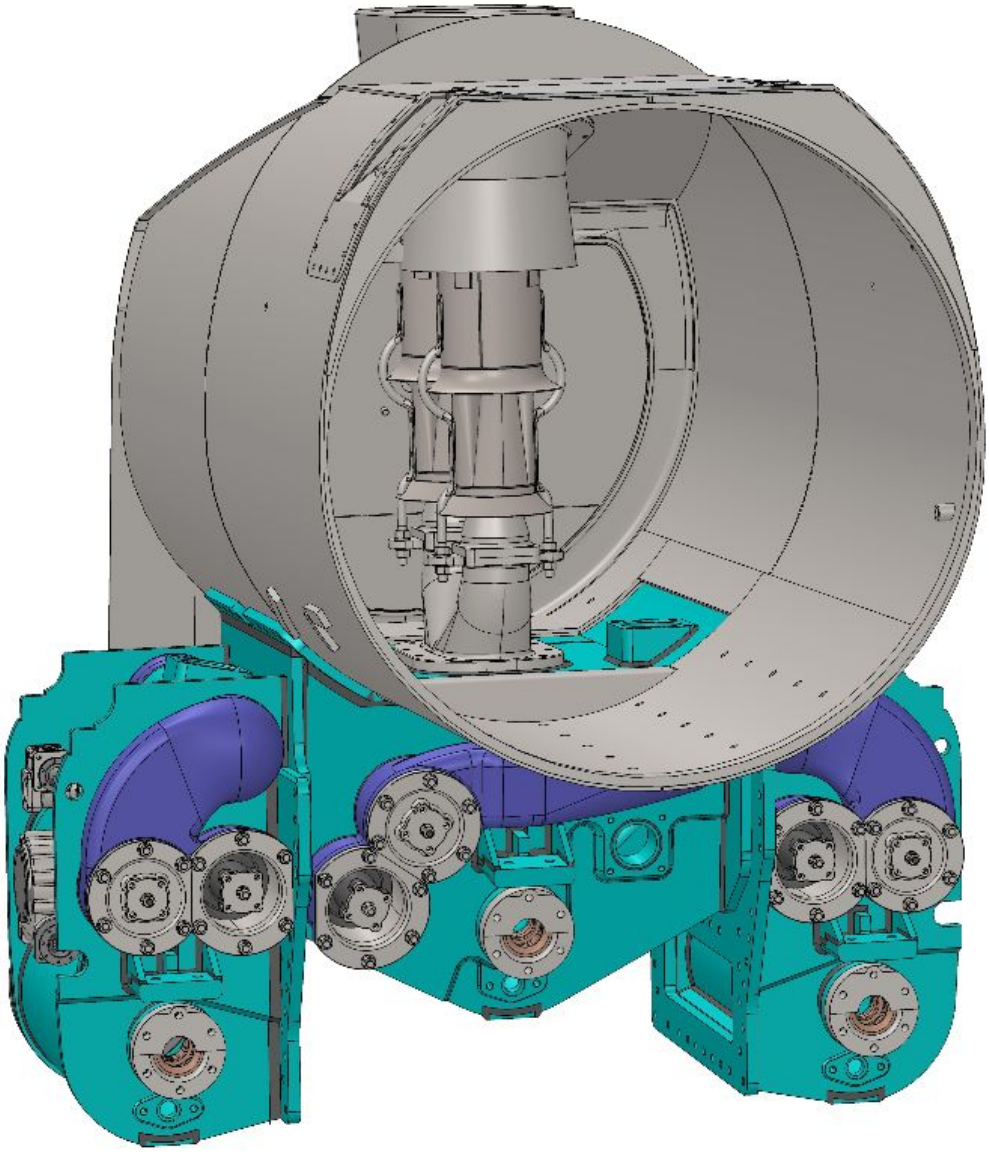

An unusual view of the cylinder block assembly with smokebox and Kylchap cowls - *David Elliott/A1SLT*

Summary: design studies into cylinder block manufacture and selection of valve gear complete; 3D CAD design of the cylinder block and valve gear substantially complete; further progress has been made in applying the weld details to the cylinder block inside exhaust passages with particular attention being paid to the order of fabrication to ensure that all welds can be completed properly.

Progress update: the updated cylinder block model has had its ancillary components added and the smokebox model modified to reflect necessary changes that have been incorporated into the cylinder block in the area of the smokebox saddle.

Next steps: continuation of detailed 2D manufacturing drawings for the cylinder block; further research into optimising steel grades for the tubes used for the cylinders and valve chests and for the cast steam ports.

Fundraising: The Cylinder Club was founded in October 2017 to fund the redesign and manufacture of the cylinder block with a target of raising £100,000 plus Gift Aid from 100 supporters each donating £1,000. The Cylinder Club closed in March 2018 having achieved its target.

BOILER UPDATE




Clockwise from top left: welded foundation rings; conical boiler barrel sections; superheater header elements; smokebox tubeplate rings - *Christopher Wörfel, DBM/A1SLT*

Summary: boiler design study completed; forged foundation ring corners manufactured & machined; regulator castings delivered; superheater header cast & machined; boiler cladding manufactured, trial fitted to frames and now in storage; boiler order placed with DB Meiningen (DBM) for delivery in 2021; foundation ring forgings and regulator castings despatched to Meiningen; the minor re-design of the banjo dome to suit the P2 cladding by has been completed by DBM; revised design approved by TüV Sud notified body; major progress on manufacture of boiler.

Progress update: with the approval of the updated design by notified body TüV Sud, DBM is making good progress with major components for the boiler(s): boiler barrel sections have been rolled and welded, including the thickened section where the dome is located; dome cover has been pressed and machined; firebox tube plate has been drilled; foundation ring sections have been machined and the foundation ring welded together; full set of superheater elements have been completed. More photographs of the components can be seen on our website here.

Next steps: assembly of boiler barrel and firebox shells.

Fundraising: The Boiler Club was founded in October 2017 to fund the design modification and manufacture of the boiler with a target of raising £600,000, plus Gift Aid, from 300 supporters each donating £2,000 in up to 40 payments of £50. As of today, The Boiler Club has attracted 191 members who have generously donated over £450,000. For further information click here – we must reach our 300 members target in 2021.

WHEELSETS UPDATE

Ian Matthews grinding off the balance weight rivets on the intermediate wheelset - *A1SLT*

Summary: study into ride & suspension completed using Vampire®; software; crank axle re-designed to comply with modern standards, approved and manufactured; all engine wheelsets complete and trial-fitted to engine; a full drawing set for the pony truck frame has been produced and checked.

Progress update: having reviewed the options for removing excess metal from the coupled wheel cannon boxes, it has been decided to do the work "in house" at DLW.

Next steps: manufacture of some simple fixtures to assist in machining off surplus material from the coupled cannon boxes.

Fundraising: The Mikado Club was founded in March 2016 to wheel the engine with an initial target of raising £200,000, plus Gift Aid, from 160 supporters each donating £1,000. This was extended in May 2017 (to also wheel the tender) to 200 supporters raising £250,000 plus Gift Aid. The Mikado Club closed in May 2018 having achieved its target.

MOTION UPDATE

Coupling rods after initial boring of rod eyes to reduce maximum thickness of material to ensure required mechanical properties achieved during heat treatment - *Robert Stephenson/A1SLT*

Summary: all heavy motion ordered from order with Stephenson Engineering Ltd of Atherton, Manchester; work started with first delivery due in autumn; updated poppet valve gear design almost complete with first components in manufacture.

Progress update: Covid-19 has slowed the process of machining, however a Stephenson Engineering Ltd production engineer has been developing the CNC programme for machining the coupling rods, from his home. A video of the programme can be seen here.

Next steps: machining the middle and rear coupling rods and forging the leading coupling rods.

Fundraising: The Motion Club was founded in May 2018 to fund forging and machining of the heavy motion, with a target of raising over £210,000 including Gift Aid, from 175 supporters each donating £1,000 in up to eight payments of £125. As of today, The Motion Club has attracted 164 members who have generously donated over £200,000. For further information on how to become a member and help us to reach our target before the convention click here.

TENDER UPDATE

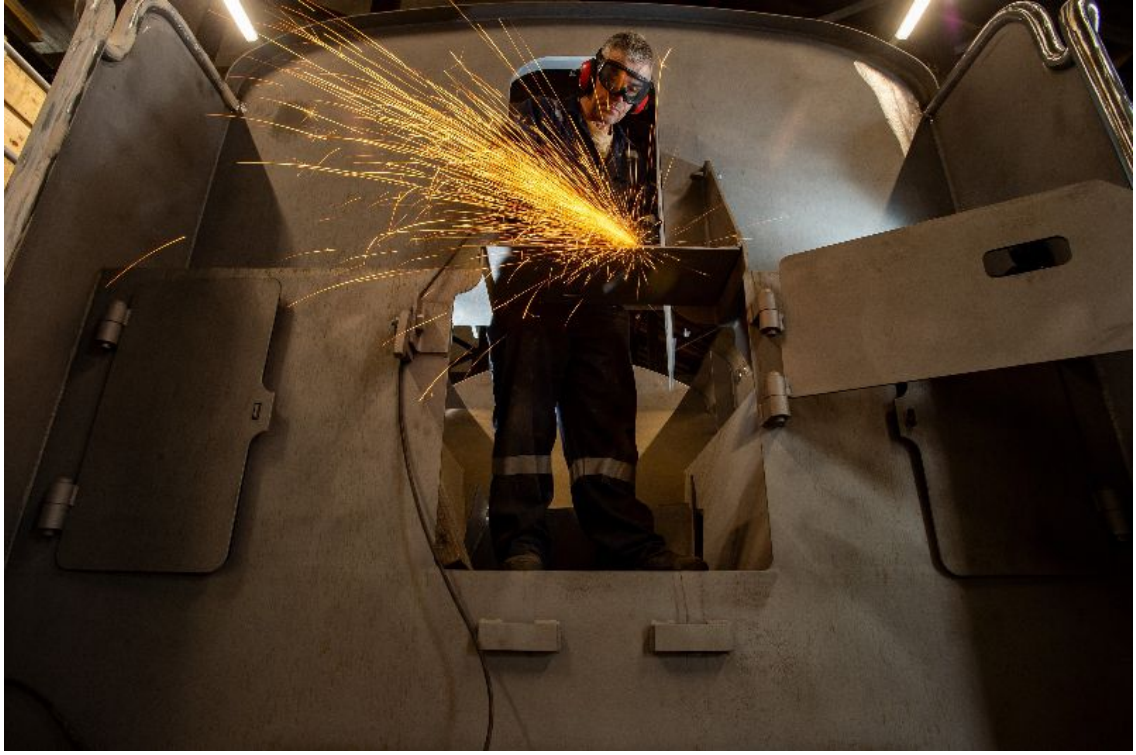

Ian Matthews using a grinder to clean surface contaminants off the tender tank before it is painted - *Bruce Rollinson,Yorkshire Post/A1SLT*

Summary: axlebox and other tender castings produced by William Cook Cast Products; frames being assembled by ID Howitt; tank construction complete; tender wheelsets are now at DLW, having been have been assembled South Devon Railway Engineering and painted by Ian Matthews.

Progress update: Ian Matthews has continued to make good progress in filling and priming the external surfaces of the tender tank and has finish painted the underside; Ian has started to fit the handrails; the design of the pockets to house the marker/tail lights is almost complete along with pockets for the concealed electrical sockets which will enable the *Tornado* style LED headlights to be fitted to the tender when the locomotive is working tender first. This has necessitated modification to the original P2 lamp brackets: the upright leg on the lamp brackets are only half an inch from the tender tank back plate which is fine for fitting traditional oil lamps but does not allow room for the clamping screw which ensures the that the beam direction for the LED headlamps remains where it should be.
More photographs of progress on the tender tank can be viewed in the news section on our website here.

Next steps: continuation of preparing and painting the tender tank; making and fitting pockets to the tender tank back sheet to fit combined tail/marker lights; repositioning the upright legs on the lamp brackets.

Fundraising: The Tender Club was launched in April 2019 to fund the construction the tender, with a target of raising £450,000, including Gift Aid, from 250 supporters each donating £1,500 in up to eight payments of £125. As of today, The Tender Club has already attracted 65 members who have generously donated over £120,000. For further information on how to become a member click here.

MISCELLANEOUS FITTINGS

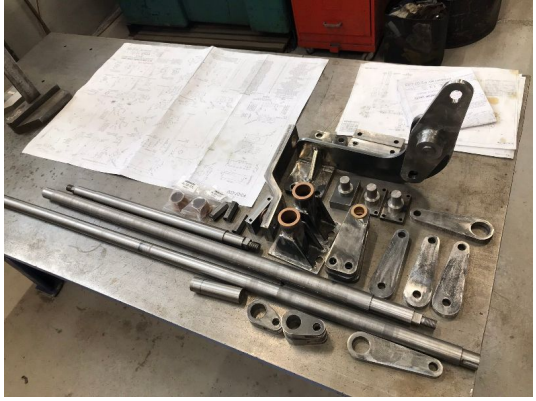

Cylinder drain cock linkage and rod ends - *Bob Hughes/A1SLT*

Running Gear

Summary: following detailed designs by Alan Parkin, DLW continues to make details for the cylinder drain cock gear.

Progress update: most parts and sub-assemblies complete and ready to fit to engine; requests for quotation have been issued for profiles for a few remaining parts including the all important operating handle!

Next steps: fitting the operating lever in the cab and fitting brackets to the running plate and frames.

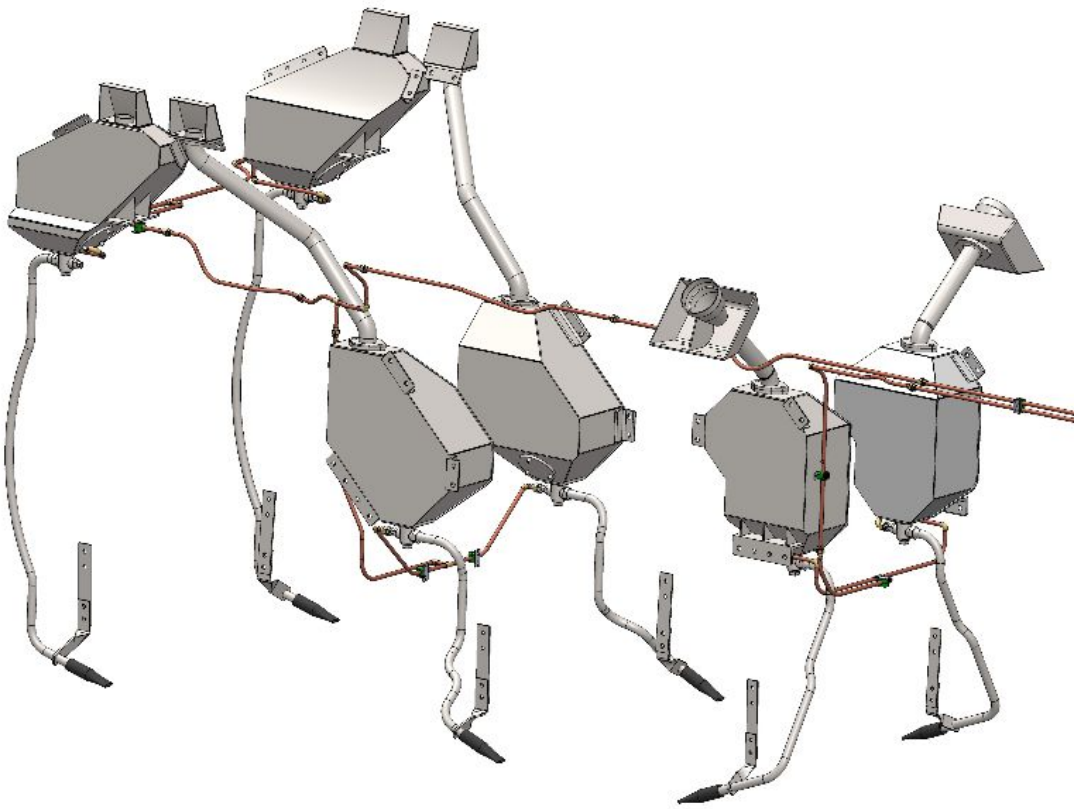

Sand boxes and pipework - *Alan Parkin/A1SLT*

Pipework

Summary: the design is well advanced and installation under way.

Progress update: Alan Parkin has completed 3D models of the sander pipework; Alan has been

modelling pipework to the turbogenerators and air pumps.

Next steps: continuation of design of pipework details, ordering of long lead items.

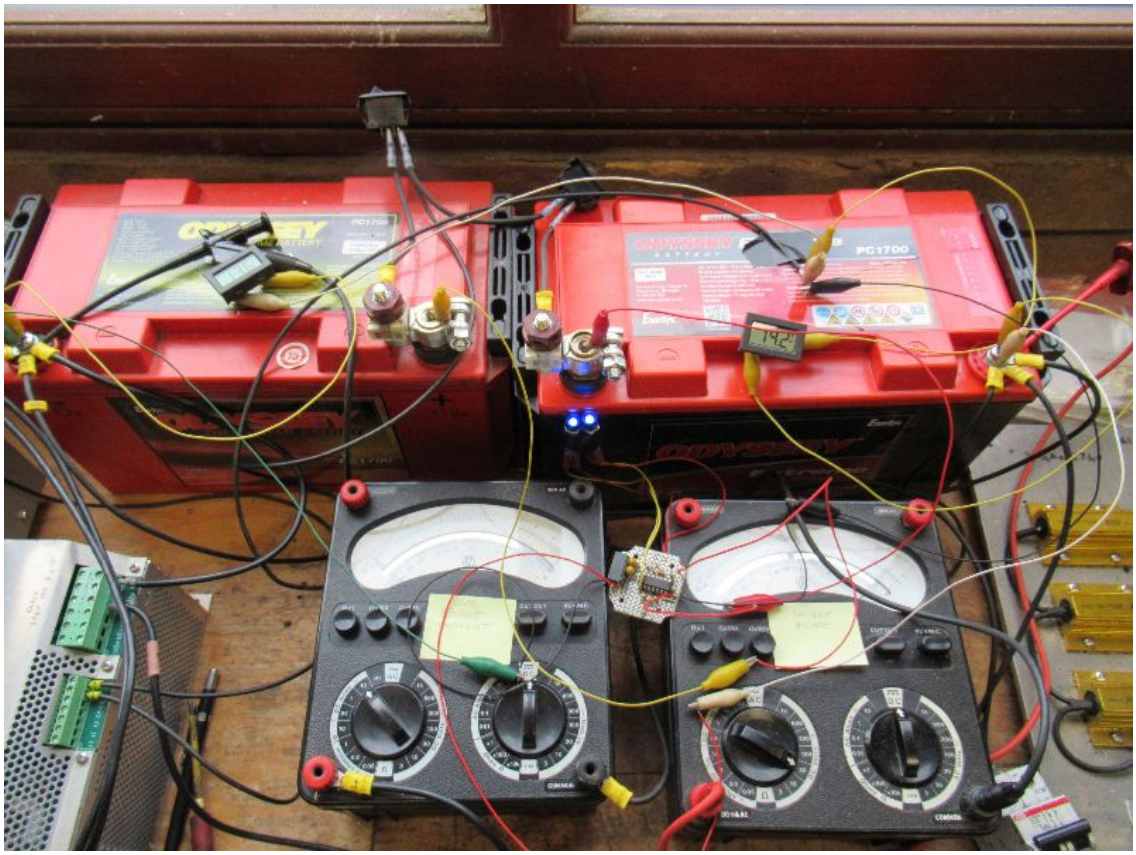

The battery fuse fault detection circuit under bench - *Rob Morland/A1SLT*

Electricals

Summary: significant progress on design and manufacture of electrical system; belt driven tender alternator nearing completion, turbine wheel for steam turbo alternator manufactured;design of essential services system ongoing; electronics design largely complete.

Progress update: ongoing bench testing of the prototype power supply has confirmed the key design requirements and allowed the supply switching and charging system design to be finalised; design of a battery fuse fault detection circuit is complete and tested; work on the detailed design of the essential services system is underway; physical mapping of wiring looms onto the engine conduit system has commenced.

Next steps: work will continue on detailed design of the essential services system, including specification and physical location of wiring looms and circuit routing table.

Fundraising

The Dedicated Donations scheme was founded to fund numerous components including the non-ferrous fittings and has raised over £400,000 to-date with new parts being frequently made available for sponsorship. For further information, click here.

Progress on No. 2007 *Prince of Wales* - *Mandy Grant/A1SLT*

TRAVEL WITH *TORNADO*

No. 60163 hauling 'The Aberdonian' - *Peter Backhouse/A1ST*

Keeping No. 60163 *Tornado* in tip-top working order is an expensive business as we are constantly being reminded! The profit from operating our programme of main line tours, *Tornado's* hire fees from heritage railways and working for other rail tour promoters, normally covers her day-to-day and year-to-year maintenance costs. However, not only do they do not at present generate a sufficient surplus to fund her five and ten year overhauls, conservatively estimated at around £500,000 each, with *Tornado* in hibernation at the National Railway Museum she isn't able to generate these fees or be the greatest advert for becoming an 'A1 for the price of a pint of beer' (£2.50 per week) Covenantor. It is therefore

vital for us to continue to maintain (and hopefully grow) *Tornado's* on-going Covenant income. If you aren't already an A1 Covenantor, please consider coming on-board and perhaps, if you are an existing Covenantor, recruit a friend. Information about becoming becoming an A1 Covenator can be found here.

We are reviewing the schedule for the locomotive and will keep the website updated as best we can as it looks like it may September before we are back running our tours. We are still taking bookings for 'The Aberdonian' tours in September. They can be booked through our website or by calling 01325 488215.

Facebook Twitter Website Email

Our mailing address is:
The A1 Steam Locomotive Trust, Darlington Locomotive Works, Hopetown Lane, Darlington. DL3 6RQ